Burner Insert Specifications

pureflame®
The Art of Fire

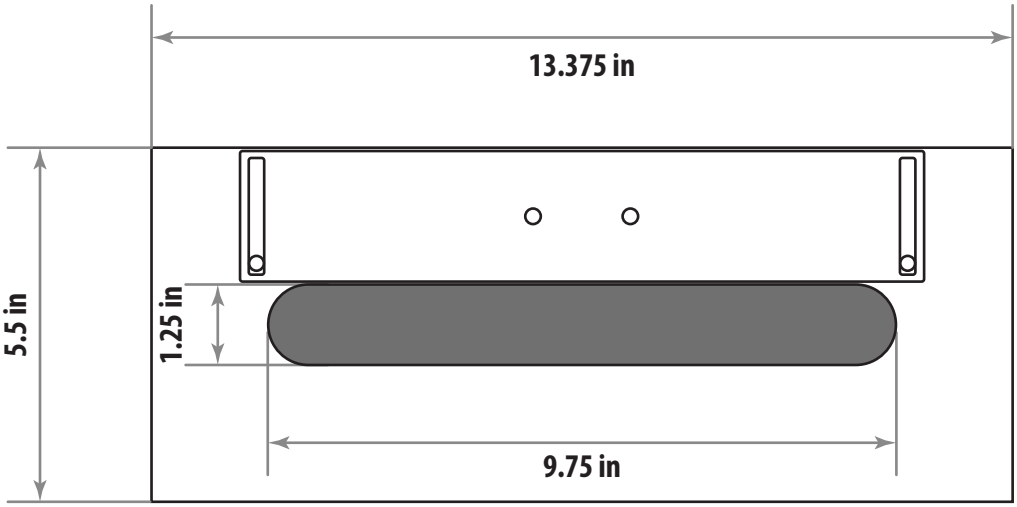

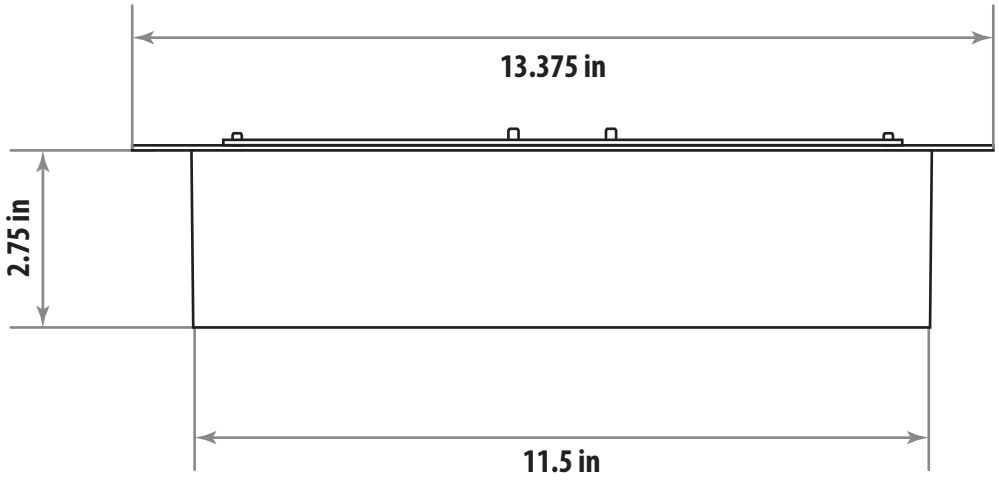

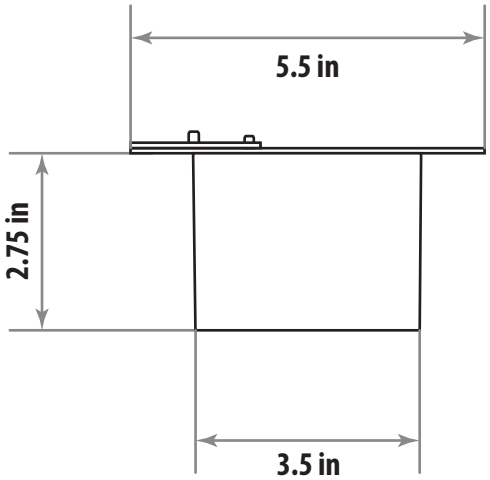

AquaFires International Inc.
Phone: 1-716-200-4959 Toll Free: 1-866-647-9225
Toll-Free Order Fax: 1-866-877-8093 email: info@pureflame.com web: www.pureflame.com